American SANDERS
An AMANO Company

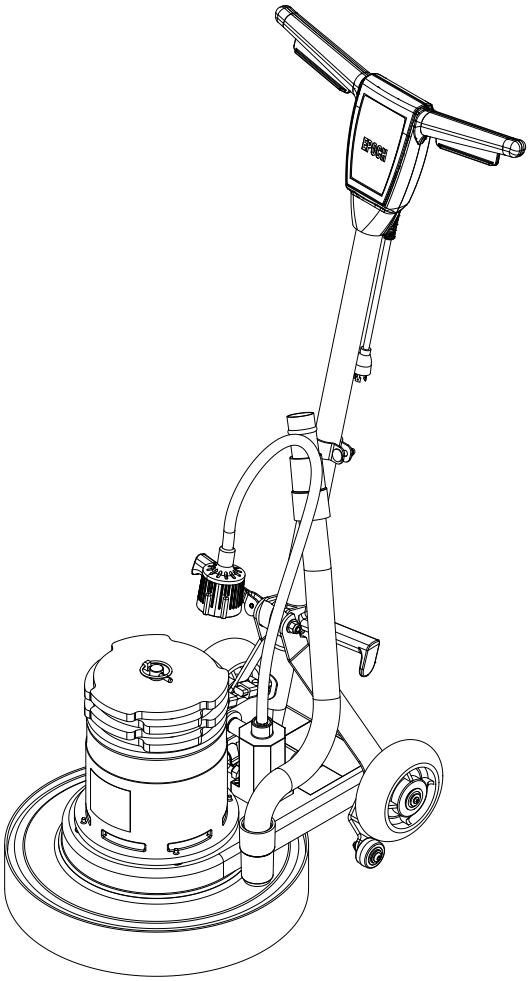

Epoch Dual Speed Rotary Sander

Operator's Manual

READ THIS BOOK

This book has important information for the use and safe operation of this machine. Failure to read this book prior to operating or attempting any service or maintenance procedure to your American Sanders machine could result in injury to you or to other personnel; damage to the machine or to other property could occur as well. You must have training in the operation of this machine before using it. If your operator(s) cannot read this manual, have it explained fully before attempting to operate this machine.

All directions given in this book are as seen from the operator's position at the rear of the machine.

EN

Contents

Operator Safety Instructions 3-5

Machine Introduction 6

120V Electrical Connection Instructions 6

230V Electrical Connection Instructions 7

Machine Set-up.....8-9

Operating Instructions 10

Maintenance..... 11

SECTION II - Parts and Service Manual

Notes..... 13

Main Assembly..... 14-15

Base Assembly..... 16-17

Handle Assembly..... 18-19

Connection Diagram..... 20

Motor & Gearbox Assembly..... 21

HydraSand Assembly..... 22-23

Wiring Diagrams..... 24

Warranty..... 25

WARNING!

The Products sold with this Manual contain or may contain chemicals that are known to certain governments (such as the State of California, as identified in its Proposition 65 Regulatory Warning Law) to cause cancer, birth defects or other reproductive harm. In certain locations (including the State of California) purchasers of these Products that place them in service at an employment job site or a publicly accessible space are required by regulation to make certain notices, warnings or disclosures regarding the chemicals that are or may be contained in the Products at or about such work sites. It is the purchaser's responsibility to know the content of, and to comply with, any laws and regulations relating to the use of these Products in such environments. The Manufacturer disclaims any responsibility to advise purchasers of any specific requirements that may be applicable to the use of the Products in such environments.

*****This product is intended for commercial use only*****

Operator Safety Instructions

In this Operation Manual you will find three statements that you must read and observe to ensure safe operation of this machine.

DANGER means: Severe bodily injury or death can occur to you or other personnel if the **DANGER** statements found on this machine or in this Operation Manual are ignored or are not adhered to. Read and observe all **DANGER** statements found in this Operation Manual and on your machine.

WARNING means: Injury can occur to you or to other personnel if the **WARNING** statements found on your machine or in the Operation Manual are ignored or are not adhered to. Read and observe all **WARNING** statements found in this Operation Manual and on your machine.

CAUTION means: Damage can occur to the machine or to other property if the **CAUTION** statements found on your machine or in this Operation Manual are ignored or are not adhered to. Read and observe all **CAUTION** statements found in this Operation Manual and on your machine.

DANGER: Failure to read the Owner's Manual prior to operating or servicing your American Sanders machine could result in injury to you or to other personnel; damage to the machine or to other property could occur as well. You must have training in the operation of this machine before using it. If you or your operator(s) cannot read English, have this manual explained fully before attempting to operate this machine.

DANGER: A. Sanding/finishing wood floors can create an explosive or combustible environment. Do not operate this machine around solvents, thinners, alcohol, fuels, floor finishes, wood dust or any other flammable materials. Cigarette lighters, pilot lights, electrical sparks and all other sources of ignition should be extinguished or avoided. Keep work area well ventilated.

B. Dust generated from sanding wood floors can spontaneously ignite or explode. Promptly dispose of any sanding dust in a metal container clear of any combustibles. Do not dispose in a fire.

DANGER: A. Electrocution could occur if the machine is being serviced while the machine is connected to a power source. Disconnect the power supply before servicing.

B. Electrocution or fire could occur if the machine is being operated with a damaged power cord. Keep the power cord clear of the pad. Always lift the cord over the machine. Do not move the machine by the power cord.

C.Shock hazard. Do not use the machine if it has been rained on or sprayed with water.

DANGER: To avoid injury keep hands, feet, and loose clothing away from all moving parts on the machine. Disconnect the power cord before replacing the pad, changing the abrasive, or when servicing. Do not operate the machine unless all guards are in place. Never leave the machine unattended while connected to a power source.

DANGER: Machine can have high starting torque. Do not operate machine on rough or uneven surfaces. Do not operate on a slope. It is possible for the machine to move suddenly from side to side and even leave the ground if misused during operation. Only experienced operators should use machine for applications that impart high torque on the machine. If unable to control the machine during operation, release the handle and step away from the machine. It will stop automatically.

WARNING: Injury can occur if protective clothing or equipment is not used while sanding. Always wear safety goggles, protective clothing, and dust mask while sanding.

WARNING: This sander is not to be used on pressure treated wood. Some pressure treated woods contain arsenic and sanding pressure treated wood produces hazardous dust. Inhaling hazardous dust from pressure treated wood can cause serious injury or death. Sanding pressure treated wood decks or uneven surfaces can damage the sander which is not covered under warranty or damage waiver.

WARNING: Any alterations or modifications of this machine could result in damage to the machine or injury to the operator or other bystanders. Alterations or modifications not authorized by the manufacturer voids any and all warranties and liabilities.

WARNING: Risk of explosion. Floor sanding can result in an explosive mixture of fine dust and air. Use floor sanding machine only in a well-ventilated area free from any flame or match.

General Power Tool Safety Warnings

WARNING: Read all safety warnings and instructions. Failure to follow warnings and instructions may result in electric shock, fire and or serious injury.

Save all warnings and instructions for future use.

The term "power tool" in the warnings refers to your main-operated (corded) power tool or battery operated (cordless) power tool.

1) Work area safety

a) **Keep work area clean and well lit.** Clutter or dark areas invite accidents.

b) **Do not operate power tools in explosive atmospheres, such as in the presence of flammable liquids, gases, or dust.** Power tools create sparks which may ignite the dust or fumes.

c) **Keep children and bystanders away while operating a power tool.** Distractions can cause you to lose control.

2) Electrical safety

a) **Power tool plugs must match the outlet. Never modify the plug in any way. Do not use any adapter plugs with earthed (grounded) power tools.** Unmodified plugs and matching outlets will reduce risk of electric shock.

b) **Avoid body contact with earthed or grounded surfaces such as pipes, radiators, ranges, and refrigerators.** There is an increased risk of electric shock if your body is earthed or grounded.

c) **Do not expose power tools to rain or wet conditions.** Water entering a power tool will increase the risk of electric shock.
d) **Do not abuse the cord. Never use the cord for carrying, pulling or unplugging the power tool. Keep cord away from heat, oil, sharp edges or moving parts.** Damaged or entangled cords increase the risk of electric shock.
e) **When operating a power tool outdoors, use an extension cord suitable for outdoor use.** Use of cord suitable for outdoor use reduces the risk of electric shock.
f) **If operating a power tool in a damp location is unavoidable, use a residual current device (RCD) or ground fault circuit interrupter (GFCI) protected supply.** Use of a RCD or GFCI reduces the risk of electric shock.

3) Personal safety

a) **Stay alert, watch what you are doing and use common sense when operating a power tool. Do not use a power tool while you are tired or under the influence of drugs, alcohol, or medication.** A moment of inattention while operating power tools may result in serious personal injury.
b) **Use personal protective equipment. Always wear eye protection.** Protective equipment such as dust mask, non-skid safety shoes, hard hat, or hearing protection used for appropriate conditions will reduce personal injury.
c) **Prevent unintentional starting. Ensure switch is in off-position before connecting to power source and/or battery pack, picking up, or carrying the tool.** Carrying power tools with your finger on the switch or energizing power tools that have the switch on invites accidents.
d) **Remove any adjustment wrench or key before turning the power tool on.** A wrench or key left attached to a rotating part of the power tool may result in personal injury.
e) **Do not overreach. Keep proper footing and balance at all times.** This enables better control of the power tool in unexpected situations.
f) **Dress properly. Do not wear loose clothing or jewelry. Keep your hair, clothing and gloves away from moving parts.** Loose clothes, jewelry, or long hair can be caught in moving parts.
g) **If devices are provided for the connection of dust extraction and collection facilities, ensure these are connected and properly used**. Use of dust collection can reduce dust related hazards. It is recommendation that the tool always be supplied via a residual current device with a rated residual current of 30mA or less.

4) Power tool use and care

a) **Do not force the power tool. Use the correct power tool for your application.** The correct power tool will do the job better and safer at the rate for which it was designed.
b) **Do not use the power tool if the switch does not turn it on and off.** Any power tool that cannot be controlled with the switch is dangerous and must be repaired.
c) **Disconnect the plug from the power source and/or the battery pack from the power tool before making any adjustments, changing accessories or storing power tools.** Such preventative safety measures reduce the risk of starting the power tool accidentally.
d) **Store idle power tools out of the reach of children and do not allow persons unfamiliar with the power tool or these instructions to operate the power tools.** Power tools are dangerous in the hands of untrained users.
e) **Maintain power tools. Check for misalignment or binding of moving parts, breakage of parts and any other condition that may affect the power tool's operation. If damaged, have the power tool repaired before use.** Many accidents are caused by poorly maintained power tools.
f) **Keep cutting tools sharp and clean.** Properly maintained cutting tools with sharp cutting edges are less likely to bind and are easier to control.
g) **Use the power tool, accessories and tool bits ect. in accordance with these instructions, taking into account the working conditions and the work to be performed.** Use of the power tool for operations different from those intended could result in a hazardous situation.

5) Service

a) **Have the power tool serviced by a qualified repair person using only identical replacement parts.** This will ensure that the safety of the power tool is maintained. If the supply cord is damaged, it must be replaced by the manufacturer, its service agent or similarly qualified persons in order to avoid a hazard.

Safety Warnings For Sanding Operations

1. This power tool is intended to function as a sander. Read all safety warnings, instructions and specifications provided with this power tool. Failure to follow all instructions listed below may result in electric shock, fire, or personal injury.
2. Operations such as grinding, wire brushing, polishing or cutting-off, are not recommended to be performed with this power tool. Operations for which the tool was not designed may create a hazard and cause personal injury.
3. Do not use accessories which are not specifically designed and recommended by the tool manufacturer. Just because the accessory can be attached to your power tool, it does not assure safe operation.
4. The rated speed of the accessory must be at least equal to the maximum speed marked on the power tool. Accessories running faster than their rated speed can break and fly apart.
5. The outside diameter and thickness of your accessory must be within the capacity rating of your power tool. Incorrectly sized accessories cannot be adequately guard or controlled.
6. The arbor size of wheels, flanges, backing pads or any other accessory must fit the spindle of the power tool. Accessories with arbor holes that do not match the mounting hardware of the power tool will run out of balance, vibrate excessively and may cause loss of control.
7. Do not use damaged accessory. Before each use inspect the accessory such as abrasive wheel for chips or cracks, backing

pad for cracks, tear or excess wear, wire brush for loose or cracked wires. If power tool or accessory is dropped, inspect for damage or install an undamaged accessory. After inspecting or installing an accessory, position yourself or bystanders away from the plane of the rotating accessory and run the power tool at maximum no-load speed for one minute. Damaged

8. Wear personal protective equipment. Depending on application, use face shield, safety goggles or safety glasses. As appropriate, wear dust mask, hearing protectors, gloves and workshop apron capable of stopping flying debris generated by various operations. The eye protection must be capable of stopping flying debris generated by various operations. The dust mask or respirator must be capable of filtering particles generated by your operations. Prolonged exposure to high intensity noise may cause hearing loss.
9. Keep bystanders a safe distance away from work area. Anyone entering the work area must wear personal protective equipment. Fragments of work piece or a broken accessory mayfly away and cause injury beyond immediate area of operation.
10. Hold power tool by gripping insulated surfaces (handle) only, when performing an operation where the cutting accessory may contact hidden wiring or its own cord. Cutting accessory contacting a "live" wire may make exposed metal parts of the power tool "live" and shock the operator.
11. Position the cord clear of the spinning accessory. If you loose control, the cord may be cut or snagged and your arm or hand may be pulled into the spinning accessory.
12. Never lay the power tool down until the accessory has come to a complete stop. The spinning accessory may grab the surface and pull the power tool out of your control.
13. Do not run the power tool while carrying it at your side. Accidental contact with the spinning accessory could snag your clothing, pulling the accessory into your body.
14. Regularly clean the power tools air vents. The motor's fan will draw the dust inside the housing and excessive accumulation may cause electrical hazards.
15. Do not operate the power tool near flammable materials. Sparks could ignite these materials.
16. Do not use excessively oversized sanding disc paper. Follow manufacturer's recommendations when selecting sanding paper. Larger sanding paper extending beyond the sanding pad presents a laceration hazard and may cause snagging, tearing of the disc or kickback.
17. Risk of explosion. Floor sanding can result in an explosive mixture of fine dust and air. Use floor sanding machine only in a well-ventilated area free from any flame or match.

Kickback and Related Warnings

Kickback is a sudden reaction to a pinched or snagged rotating wheel, backing pad, brush or any other accessory. Pinching or snagging causes rapid stalling of the rotating backing pad which in turn causes uncontrolled power tool to be forced in the opposite direction of the backing pad's rotation at the point of the binding.
For example, if an abrasive wheel is snagged or pinched by the work piece, the edge of the wheel that is entering into the pinch point can dig into the surface of the material causing the wheel to climb out or kick out. The wheel may either jump toward or away from the operator, depending on direction of the wheel's movement at the point of pinching. Abrasive wheels may also break under these conditions.
Kickback is the result of power tool misuse and incorrect operating procedures or conditions and can be avoided by taking proper precautions as given below.

1. Maintain a firm grip on the power tool and position your body and arms to allow you to resist kickback forces. Always use auxiliary handles, if provided for maximum control over kickback or torque reactions during start up. The operator can control torque reactions or kickback forces, if proper precautions are taken.
2. Never place your hand near the rotating accessory. Accessory may kickback over your hand.
3. Do not position your body in the area where power tool will move if kickback occurs. Kickback will propel the tool in the direction opposite to the wheel's movement at the point of the snagging.
4. Use special care when working corners, sharp edges etc. Avoid bouncing and snagging the accessory. Corners, sharp edges or bouncing have a tendency to snag the rotating accessory and cause loss of control or kickback.

Additional Rules For Safe Operation

1. Empty the dust bag or dust collection receiver frequently. Do not leave residue in dust bag or dust collection receiver unattended. Always empty in a non-combustible metal container. Sanding wood or varnish produces dust that can self ignite and cause injury or damage. Follow this precaution for storage.
2. Set all exposed nails. Sweep loose abrasive away from work area. Do not strike metal pipes, ect., with sanding paper. Striking metal or abrasive particles with sanding paper produces sparks that could ignite the sanding dust which can cause injury or damage.
3. Do not operate a partially assembled power tool. Keep all adjustments within manufacturer's specifications. Keep all fasteners tight. Operating a partially assembled power tool could result in injury to the operator or bystander and could cause damage to the equipment or surroundings.
4. Do not attempt to change the sanding paper while the power tool is running. The sanding drum can snag clothing and cause injury to limbs, and moving sanding paper can cause abrasions.
5. The power tool should only be used on an electrical system (mains) that is rated for the electrical requirements of the power tool as shown on the nameplate. Use only on an earthing (grounded) system. Do not service the power tool if it is energized or connected to an electrical circuit. Improper use could cause fire or electric shock.

Introduction

The Epoch is a floor sanding machine. It can also be used for polishing, buffing and stripping. The machine can be used on wood, vinyl, terrazzo or cement floors.

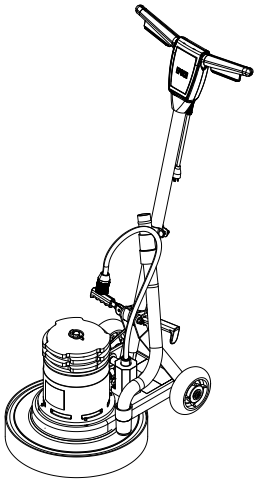

Model	*07217A with HydraSand*	*07218A without HydraSand*	*07217C with HydraSand (CSA)*	*07221A 230V / 50Hz with HydraSand*
Code Number	07217A	07218A	07219A / 07217C	07221A
Voltage (Volts)	120	120	120	230
Frequency (Hz)	60	60	60	50
Current (Amps)	16	16	16	8
Power (hp)	1.5 (1.1 kw)	1.5 (1.1 kw)	1.5 (1.1 kw)	1.5 (1.1 kW)
Pad Diameter	16.0 (401 mm)	16.0 (401 mm)	16.0 (401 mm)	16.0 (401 mm)
Pad Speed (rpm)	175 or 300	175 or 300	175 or 300	145 or 250
Cord Length (feet)	50 (15.2 m)	50 (15.2 m)	50 (15.2 m)	40 (12.2 m)
Weight (pounds)	Machine only - 95 lbs (43 kg) Machine w/ weights - 120 lbs (54 kg) Machine w/ weights & HydraSand - 132 lbs (60 kg)	Machine only - 95 lbs (43 kg) Machine w/ weights - 120 lbs (54 kg) Machine w/ weights & HydraSand - 132 lbs (60 kg)	Machine only - 95 lbs (43 kg) Machine w/ weights - 120 lbs (54 kg) Machine w/ weights & HydraSand - 132 lbs (60 kg)	Machine only - 95 lbs (43 kg) Machine w/ weights - 120 lbs (54 kg) Machine w/ weights & HydraSand - 132 lbs (60 kg)

CAUTION: Your equipment may be inappropriate on some installations. Always consult with the flooring manufacturer on the proper installation, preparation, and finishing of their product. Determine suitability of your equipment in preparing the product.

Electrical Connection Instructions (120V)

Instructions for connection to the power supply and the electrical ground.

This product must be grounded. If it should malfunction or breakdown, grounding provides a path of least resistance for electric current to reduce the risk of electrical shock. This product is equipped with a cord having an equipment-grounding conductor and grounding plug. The plug must be inserted into an appropriate outlet that is properly installed and grounded in accordance with all local codes and ordinances.

WARNING: Improper connection of the equipment-grounding conductor can result in a risk of electric shock. Check with qualified electrician or service person if you are in doubt as to whether the outlet is properly grounded. Do not modify the plug provided with the product - if it will not fit the outlet, have a proper outlet installed by a qualified electrician.

This product is for use on a nominal 120 volt circuit and has a grounding attachment plug that looks like the plug illustrated in Fig. 12. Make sure that the product is connected to an outlet having the same configuration as the plug. No adaptor should be used with this product. Always connect the machine to a dedicated 20 amp electrical line to prevent nuisance breaker tripping and line overload due to other devices.

WARNING: To prevent possible electric shock, protect the machine from rain. Keep the machine in a dry building.

WARNING: To prevent possible electric shock, always use a 3-wire electrical system connected to the electrical ground. For maximum protection against electrical shock, use a circuit that is protected by a ground fault circuit interrupter. Consult your electrical contractor.

WARNING: Do not cut, remove or break the ground pin. If the outlet does not fit the plug, consult your electrical contractor.

WARNING: Have worn, cut or damaged cords replaced by an authorized service person.

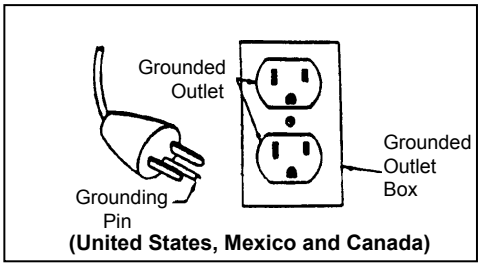

(United States, Mexico and Canada)

Figure 12

Extension Cords (120V)

Use only an approved extension cord with three conductors, a plug with three terminals, and a connector body with three holes. The machine has a power cord with wire size 12 AWG (AWG means American Wire Gauge). Use of an extension cord requires use of American Sanders 40590A POWER BOOSTER to supply adequate voltage for operation.

WARNING: If you use an extension cord, use an extension cord with minimum wire size 12 AWG. Do not use an extension cord longer than 50 feet. Do not join two extension cords.

Electrical Connection Instructions (230V)

CAUTION: This machine will operate only on the AC frequency and electrical voltage shown on the nameplate. Make sure you have the correct frequency and voltage before connecting the power cord to an outlet.

This machine must be connected to the electrical ground to protect the operator from electric shock. The machine has a power cord with two main conductors and one earthing conductor. Connect the plug to the type of receptacle shown in figure 5. The green and yellow conductor cord is the ground wire. Never connect this wire to any terminal other than the ground terminal.

WARNING: Always use this machine with an AC three-conductor electrical system connected to the electrical ground. Replace any worn, cut, or damaged cords. Replace any damaged plugs, receptacles, or connector bodies. Do not move the machine over an electrical cord. Always lift the cord over the machine.

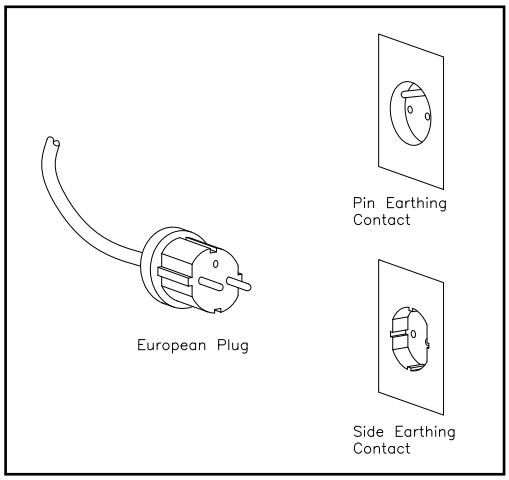

Figure 5

Extension Cords (230V)

Use only an approved extension cord with two main conductors and one earthing conductor.

WARNING: If you use an extension cord, use an extension cord with minimum wire size 1.50 mm2. Do not use an extension cord longer than 15 meters. Do not join two extension cords.

WARNING: Do not cut, remove, or break the ground terminal. Do not try to fit a three-terminal plug into a receptacle or connector body that does not fit the plug. If the receptacle or connector body does not fit the plug, see your Authorized person to make the connection.

Machine Set-up

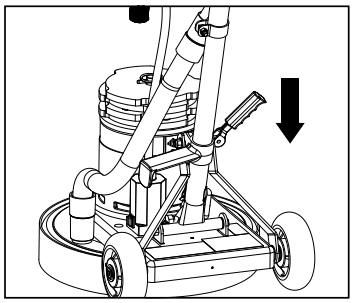

Figure 1

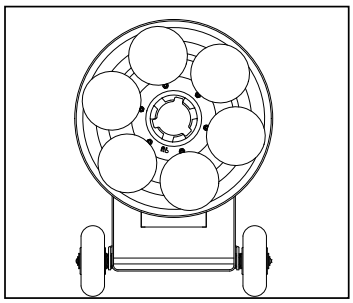

Figure 1A

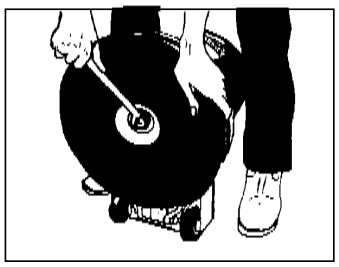

Figure 2

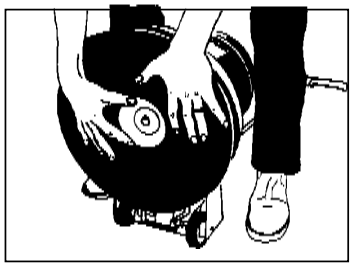

Figure 3

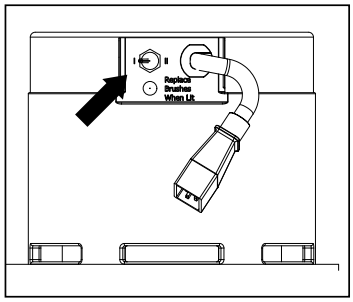

Figure 4

WARNING: Always remove the electrical plug from the electrical outlet before installing or changing the sandpaper.

How To Install The Sandpaper (HydraSand)

To install the sandpaper, follow this procedure:

1. Put the handle in the vertical position.
2. Lock the handle. To lock the handle, push the locking lever down. See figure 1.
3. Tilt the machine backward until the handle is on the floor.
4. Put one foot on each side of the machine.
5. The HydraSand sanding head utilizes hook and loop style sanding paper. Pull off the pad hook the spent abrasive
6. Replace with new sanding abrasive. See figure 1A.

How To Install The Sandpaper (Alternate Hard Plate)

1. Put the handle in the vertical position.
2. Lock the handle. To lock the handle, push the locking lever down. See figure 1.
3. Tilt the machine backward until the handle is on the floor.
4. Put one foot on each side of the machine.
5. Using a 7/8 wrench, remove the nut and the washer that hold the paper holder. See figure 2.
6. Put the sandpaper on the sanding pad.
7. Put the paper holder in position. See figure 3.
8. Install the washer and the nut that hold the paper holder.

Two Speed Selection

This machine comes equipped with a selector switch for 175 or 300 RPM operation.
See figure 4 for location of speed switch.

175 RPM speed selection is for use with finer grit sanding abrasive (100 grit or greater) to help reduce the effects of abrasive heat on the wood that can lead to closing wood pours and discoloration from burnishing the woods surface. This speed is also used for buffing and polishing.

300 RPM operation will yield the greatest wood removal and productivity and can successfully be used with more course grit abrasives. (80 grit or below)

CAUTION: Wood species differ greatly in their sanding characteristics, always test the speed selection with any grit abrasive used to understand how the wood will react. The general guidelines given here may not be appropriate for your conditions.

CAUTION: Do not use the 175 RPM setting for 80 grit or lower. This could result in an over-current condition.

Sanding Cuts and Sandpaper

Initial Cut
The purpose of the initial cut is to remove old finish and gross imperfections on the floor surface. A coarse abrasive should be used.

If glazing, loading, or burning takes place immediately into an initial cut, select a coarser abrasive. If this should occur during an initial cut, the abrasive has dulled and must be replaced.

Final Cuts
The purpose of a finishing cut is to remove the scratches produced during the initial cut. Use a fine (60-80 grit) grain abrasive.

If the surface remains rough after a finishing cut, it may be necessary to use an even finer grain of abrasive (80-100 grit). Care should be taken in selecting the grit size of the abrasive. A very fine grain will close the pores on a wood floor making admission of a stain difficult. Note some finer grain abrasives may begin to heat the woods surface and burnish the wood grain. use the low motor speed to help avoid this result.

Machine Set-up

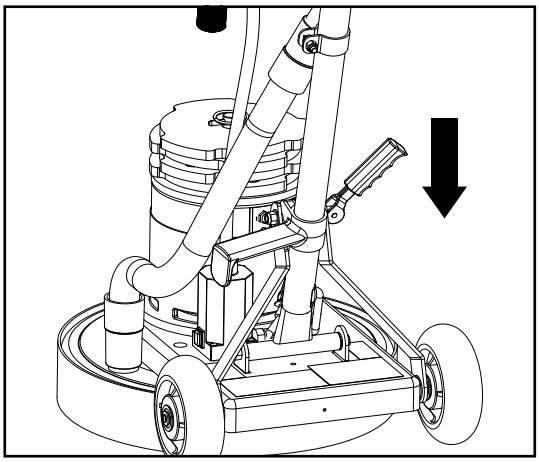

Figure 5

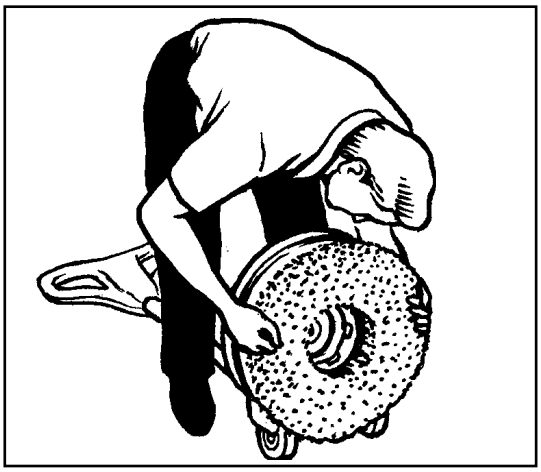

Figure 6

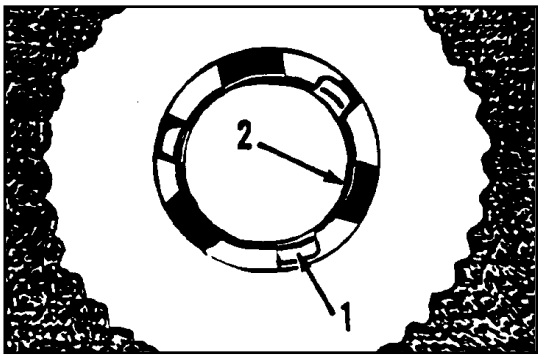

Figure 7

1. The lugs.
2. The drive adapter openings.

WARNING: Always remove the electrical plug from the electrical outlet before installing or changing the pad or brush.

How To Install The Brush Or Pad Driver

To install the brush or pad driver, follow this procedure:

1. Put the handle in the vertical position.
2. To lock the handle, push the locking lever down. See figure 5.
3. Tilt the machine backward until the handle is on the floor. See figure 6.
4. Put one foot on each side of the machine. See figure 6.
5. Align the lugs (1) on the locking plate into the pad driver adapter openings (2). See figure 7.
6. To lock the brush or pad into position, turn the brush or pad driver clockwise.
7. Turn the brush or pad counterclockwise to unlock and remove the brush.
8. Lift the machine to the vertical position.

NOTE: To prevent damage to the brush or pad driver, remove the accessory while not in use. Keep the brush in a cool, dry place.

How To Adjust The Handle

To adjust the handle, follow this procedure:

1. The locking lever is on the lower part of the handle tube. Use your foot to lift the lever. See figure 5.
2. Lower the handle to the best operating position.

NOTE: For the best operating position, keep your back straight, bend only your arms.

3. Using your foot, push the locking lever down.
4. Hold the handle against your body for the best control.

Operating Instructions

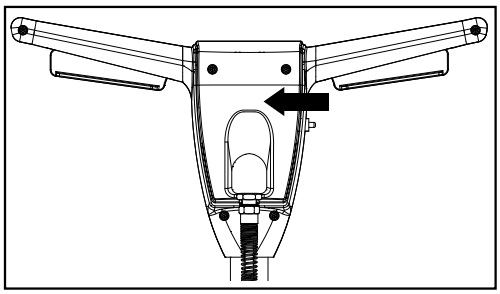

Figure 8

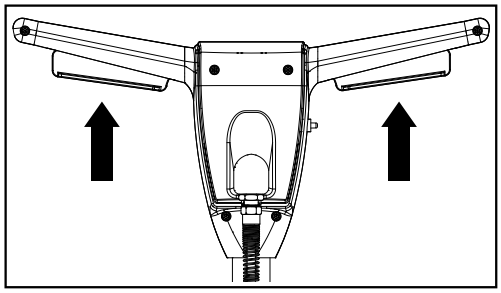

Figure 8A

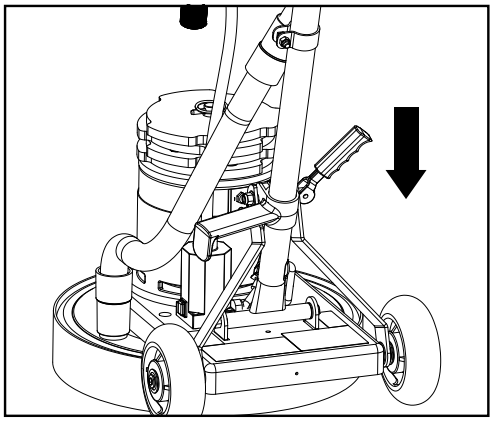

Figure 9

DANGER: Machine can have high starting torque. Do not operate machine on rough or uneven surfaces. Do not operate on a slope. It is possible for the machine to move suddenly from side to side and even leave the ground if misused during operation. Only experienced operators should use machine for applications that impart high torque on the machine. If unable to control the machine during operation, release the handle and step away from the machine. It will stop automatically.

WARNING: Never start machine when the handle is in the vertical position.

The switch to start and stop the machine is activated by the interlock switch (Fig. 8) and the levers (Fig 8A) under the handle grips.

To start the machine, follow this procedure:

1. Lower the handle

2. Lock the handle in the best position for operation. (Fig. 9)

NOTE: Make sure you hold the handle with both hands.

3. Push the interlock switch (Fig. 8), and apply pressure to the levers (Fig. 8A).

How To Control The Machine

NOTE: Sanding operations create higher torque conditions than normal floor polishing. Make sure you firmly grip the handle with both hands.

The side to side movement of the machine is controlled by raising the handle and pressing down on the handle. To move the machine to the left, press down on the handle slightly. To move the machine to the right, raise the handle slightly.

Inexperienced users should practice operating the machine prior to beginning their project. Practice in a large open area where the floor is smooth, with only a cleaning pad on the machine. The user should practice operating in this manner until they can control the machine consistently.

Operating Instructions

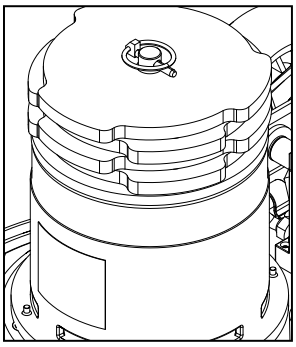

Figure 10

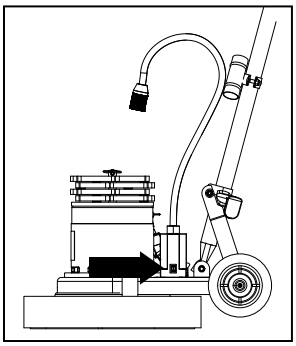

Figure 11

Adding And Removing Additional Weight

This Machine comes with four (4) 6.25 pound (2.8 kg) removable weights for a total of 25 pounds (11.3 kg) maximum that can be added to increase the PSI load and abrasive performance. See figure 10.

Caution should be used if adding weight to the machine as this increases the torque required to turn the abrasive, thus increasing the amperage required by the motor to perform the sanding operation.

Floors with finish or residue like sealers increase the resistance on the abrasive; adding weight in this condition can overload the motor and trip a 20 amp circuit breaker.

Should this occur allow 15 minutes for the machine and breaker to cool. Remove additional weight and operate the machine in the 300 rpm setting to reduce the load placed on the motor.

How To Use The Lamp

To Position the Lamp

1. The attached LED lamp will only operate when the machine is plugged in.
2. Bend the flexible arm of the lamp to the desired position.
3. Press the “ON” switch at the base of the lamp attached to the frame of the machine. See figure 11.

Maintenance

WARNING: Maintenance must be done by authorized personnel only.

CAUTION: Keep all adjustments according to specifications.

Maintenance Instructions

Return the machine to a American Sanders Authorized Service Location every 12 months for maintenance inspections.

Switches

WARNING: All electrical repairs must be done by authorized personnel only. The machine must be tested after electrical repairs to make sure it is safe to operate. Disconnect the electrical plug from the electrical outlet before doing any electrical repairs.

The start and stop switch has an interlock which prevents the contacts from being closed. If any part of the switch is not operating, replace the part. If any part of the electrical system of the machine is not operating or is damaged, replace the part. Make sure all connections are tight. Return the machine to the American Sanders Service Branch or a American Sanders Authorized Service Center for electrical repairs or testing.

Maintenance Of The Motor

If repairs to the gear unit or motor are needed, do not disassemble the gears and motor. Return the machine to the nearest American Sanders Service Branch or American Sanders Authorized Service Center.

For safe operation, and longer life to your American Sanders product, use only American Sanders parts.

NOTE: The grease (503802) for the gear box needs to be changed every year. The Epoch requires 8 oz. of grease.

Maintenance

Problem	Possible Cause	Solution
Machine will not start	No power	Check the main power supply (building circuit breaker).
		Check the cord connection at the wall outlet
	Switch lever safety lock not depressed	Hold in the switch lever safety lock and then engage switch levers.
	Bad connection	Check the motor and cord interlock connections.
	Bad motor speed selector switch	Change the motor speed. If motor runs, change the speed selector switch.
	Defective Switch	Check and replace if necessary.
Motor runs sluggish	Low voltage	Using extension cord with wire smaller than 12/3. Replace with a 12/3 extension cord.
		Using more than one extension cord. Only use one 50ft 12/3 extension cord.
		Electrically connect to American Sanders Power Booster.
	Motor carbon brushes are worn	Check and replace if necessary.
	Defective handle switch	Check and replace if necessary.
	Bad rectifier	Contact an authorized American Sander Dealer.
Fuse / circuit breaker repeatedly trips	Low voltage	Eliminate extension cord & locate a power source closer to work site.
		Have voltage checked by a qualified electrician.
		Electrically connect to American Sanders Power Booster.
	Not on a dedicated circuit	Make sure there is no other items using power on the circuit.
	Motor is overloaded	Remove weights.
		Switch to high speed, especially if using paper lower than 100 grit or if removing finish.
	Bad connection	Contact an authorized American Sander Dealer.
	Defective motor	Contact an authorized American Sander Dealer.
Machine wobbles during operation	Defective pad	One side is more dense than the other. Replace pad.
	Machine left setting on pad for extended time	Pad has taken "a set". Replace pad.
	Warped block on brush or padholder	Check and replace if necessary.
	Block not installed properly	Remove and install properly.
	HydraSand head damaged.	Inspect head and repair or replace
Light does not work	Light switch not turned "ON".	Turn "ON" light.
	Light damaged	Check and replace if necessary.

Epoch
Operator's Manual

Notes:

American SANDERS
An AMANO Company

Main Assembly

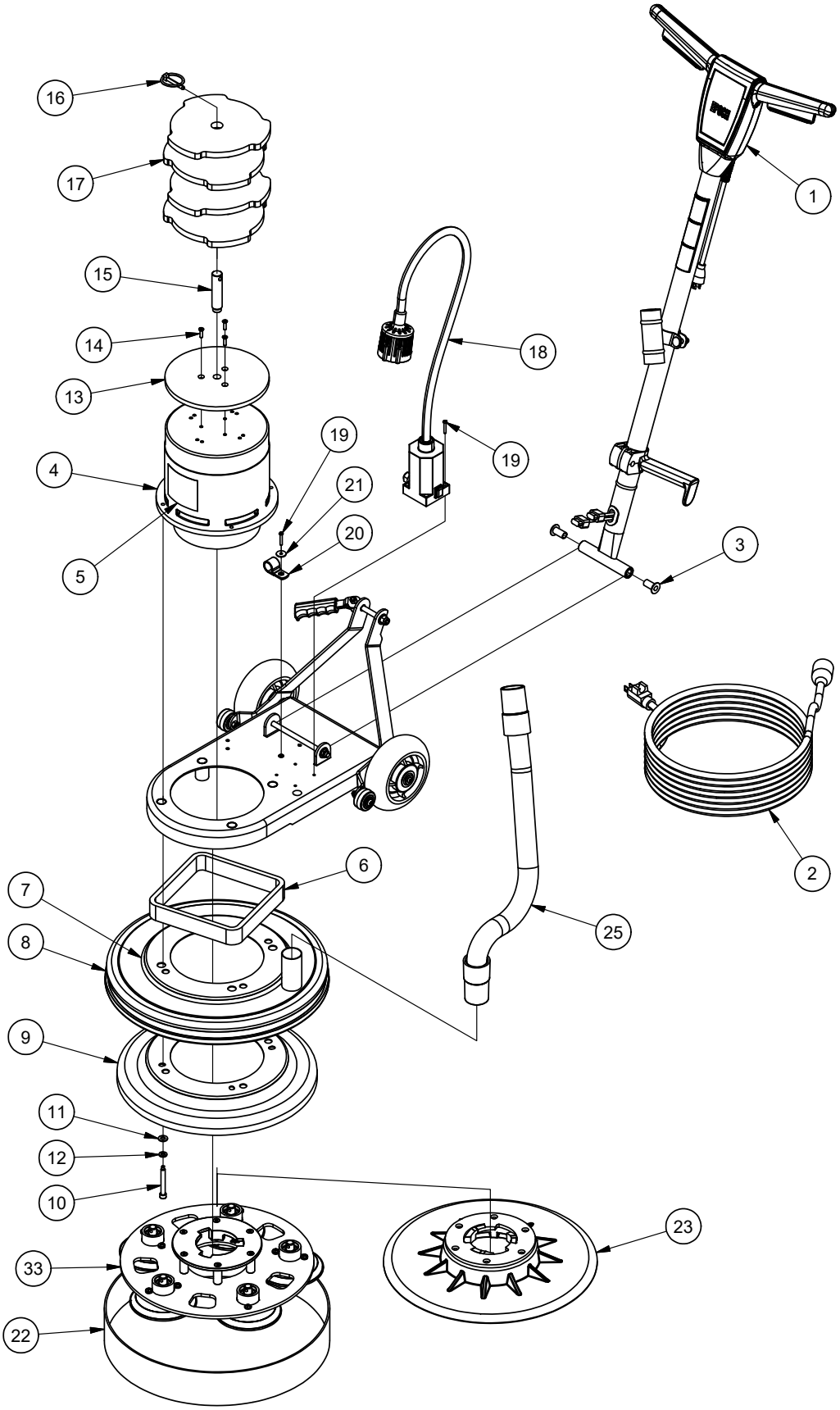

RF073600 013025

Main Assembly

PARTS LIST			
ITEM	QTY	PART NO.	DESCRIPTION
1A	1	AS034700	HANDLE ASM., SANDER, EPOCH (120V)
1B	1	AS030000	HANDLE ASM., EPOCH, 230V, IEC (230V)
2A	1	40540A	CORDSET, 12-3 X 40FT 5-15P (120V)
2B	1	MP513000	CORD, POWER SUPPLY, CE, IEC, RED (230V)
2C	1	MP514000	CORD, POWER SUPPLY, AUSTRALIAN, IEC (AUSTRALIAN)
3	2	50794A	BUSHING NYLON C2K
4A	1	AS024000	MOTOR, GEAR, 1.5HP, 115V, HI-AMP, 2SPEED (120V)
4B	1	AS028300	MOTOR, GEAR, 1.5HP, 230V, HI-AMP, 2SPEED (230V)
5	1	AS013600	DECAL, AMERICAN SANDERS, 3"
6	1	52368A	SEAL FOAM
7	1	10241A	WLDMNT DUST SHIELD
8	1	30381A	BUMPER, POLISHER, 16"
9	1	61832A	SHIELD INNER RS 16DC
10	4	NB073800	SCREW, 5/16-18 X 2 1/2", SHCS, W/ DOG PT
11	4	980651	WASHER 5/16 SAE FLAT
12	4	980652	WASHER, LOCK, 5/16
13	1	AS025000	PLATE, WEIGHT, BRACKET, 7.8" DIA.
14	3	NB073500	SCREW, SOCKET, FLAT, 10-32 X 3/4, CS, SS
15	1	AS025100	ROD, WEIGHT, BRACKET, THREADED
16	1	NB046300	PIN, LYNCH, 1/4" X 1 3/4"
17	4	AS027200	WEIGHT, 8" DIA, W/ RUBBER FEET
-	12	AS025200	FEET, RUBBER, .81" OD, .12" H, BLACK (NOT SHOWN, 3 REPLACEMENT FEET PER WEIGHT)
18A	1	AS034600	LIGHT, LED, 35 DEG. BEAM, ASM., B
18B	1	AS034900	LIGHT, LED, 35 DEG. BEAM, ASM., B, 230V
-	1	AS027600	BULB, LIGHT, LED (NOT SHOWN)
-	1	AS027700	TRANSFORMER, LIGHT, LED (NOT SHOWN-120V)
-	1	AS028600	TRANSFORMER, LIGHT, LED, 230V (NOT SHOWN-230V)
-	1	AS027800	SHADE, LIGHT, LED (NOT SHOWN)
-	1	AS027900	TRANSFORMER HOUSING, LIGHT, LED (NOT SHOWN)
-	1	AS028000	SOCKET WIRE ASM, LIGHT, LED (NOT SHOWN)
-	1	AS028100	ROCKER SWITCH, LIGHT, LED (NOT SHOWN)
-	1	AS028200	SWITCH COVER, LIGHT, LED (NOT SHOWN)
19	5	NB073900	SCREW, 8-32 X 1", RH, PHILLIPS
20	1	NB8130	CLAMP, 3/4" ID, RETAINER
21	1	80291A	WASHER FLAT 10 TYPE B WIDE
22	1	30725A	SKIRT, RS-16DC
23	1	10242A	ASSY PAD DRIVER
25	1	30408B	1.5" X 30" CUFFS BE BLACK
32	1	MP540600	DECAL, DANGER, HANDS & FEET
33	1	SA039700	KIT, HYDRASAND 5, ASM.

RF073600 013025

Base Assembly

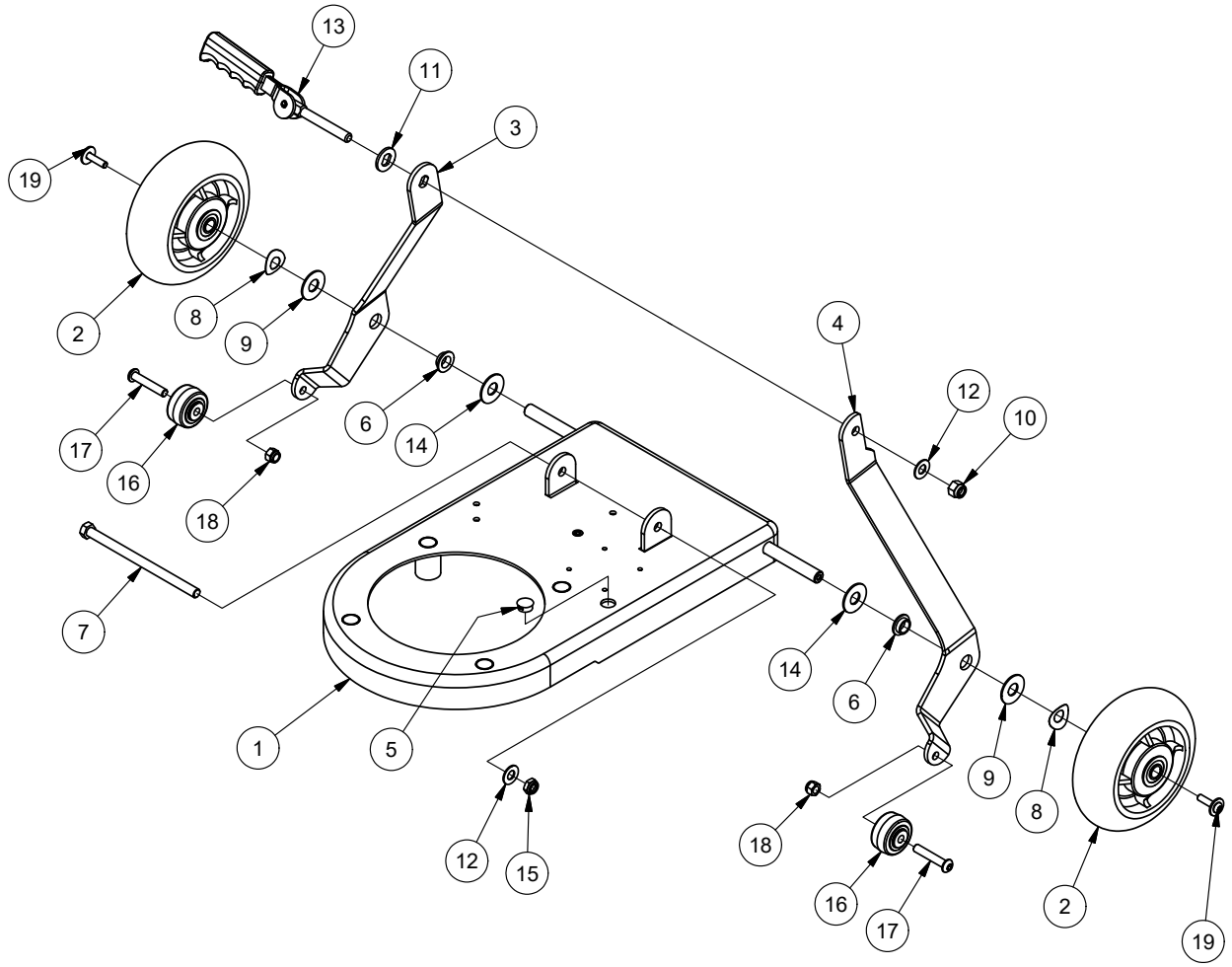

RF078900 053023

Base Assembly

PARTS LIST			
ITEM	QTY	PART NUMBER	DESCRIPTION
1	1	AS027100	FRAME, EPOCH, W/ INSERTS
2	2	RV009600	WHEEL, PERFORMA, 6" GREY
3	1	AS043802	ARM, LINK, RIGHT, EXTENDED,PLT
4	1	AS043902	ARM, LINK, LEFT, EXTENDED,PLT
5	1	57120A	PLUG-BUTTON
6	2	MP165400	BUSHING, FLANGED, BRONZE, 1/2 ID X 1/4 L
7	1	80087A	SCREW 3/8-16 X 6
8	2	80295A	WASHER BOWED .516ID X 1.06OD
9	2	NB034600	WASHER, FLAT, 1/2", SS
10	1	920342	NUT LK 3/8 -16 REG
11	1	AS087800	WASHER, WEAR, CAM
12	2	980645	WASHER, 3/8" SAE, FLAT
13	1	56109699	CAM ASSY WITH GRIP
14	2	87607A	WASHER FLT 1.25X .52 X .06 NYLON
15	1	920248	NUT 3/8-16 ESNA LIGHT
16	2	MP246200	WHEEL, PERFORMA, 1 5/8 X 7/8
17	2	NB3003	SCREW, BH, 5/16-18 X 1 3/4
18	2	920110	NUT, 5/16-18 HEX LOCK
19	2	80292A	SCREW .25-20 X 1.00 BHHR SEMS

Handle Assembly

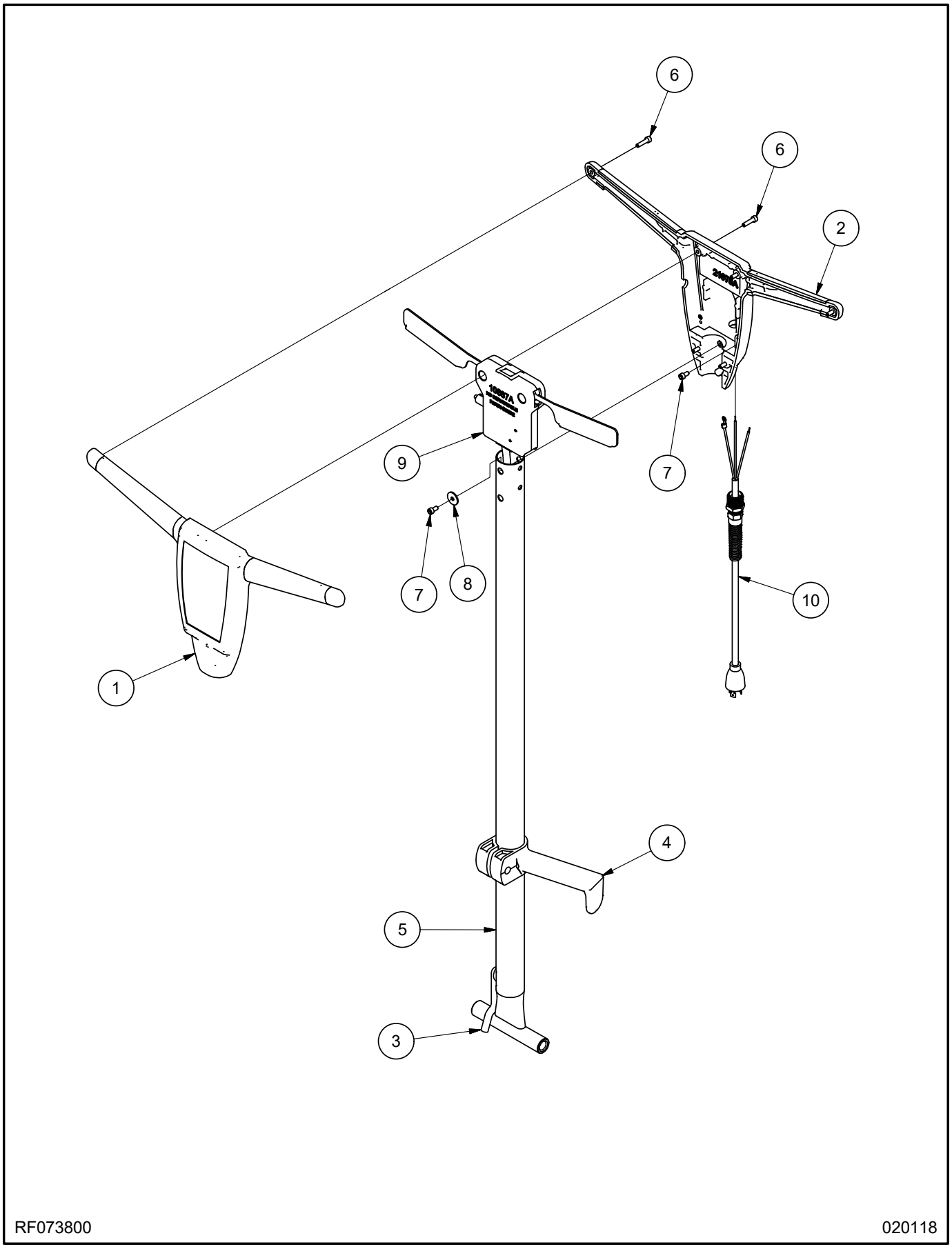

Handle Assembly

PARTS LIST			
ITEM	QTY	PART NO.	DESCRIPTION
1	1	21074A	HANDLE, FRONT - CFP
2	1	21075A	HANDLE, REAR - CFP
3	1	AS025400	CORD, INTERCONNECT, 5 CONDUCTOR, SANDER
4	1	50781A	CLAMP HANDLE C2K
5	1	61373A	HANDLE TUBE
6	6	80284A	SCREW 10-32UNF X .75 HRCS
7	2	80290A	SCREW 10-32 X 3/8 HRCS
8	1	80291A	WASHER FLAT 10 TYPE B WIDE
9	1	10687A	MODULE INTERLOCK ASM
10A	1	MP488900	CORD, ADAPTER (120V)
10B	1	AS029100	CORD, HANDLE, EXP,IEC (230V)

Connection Diagram

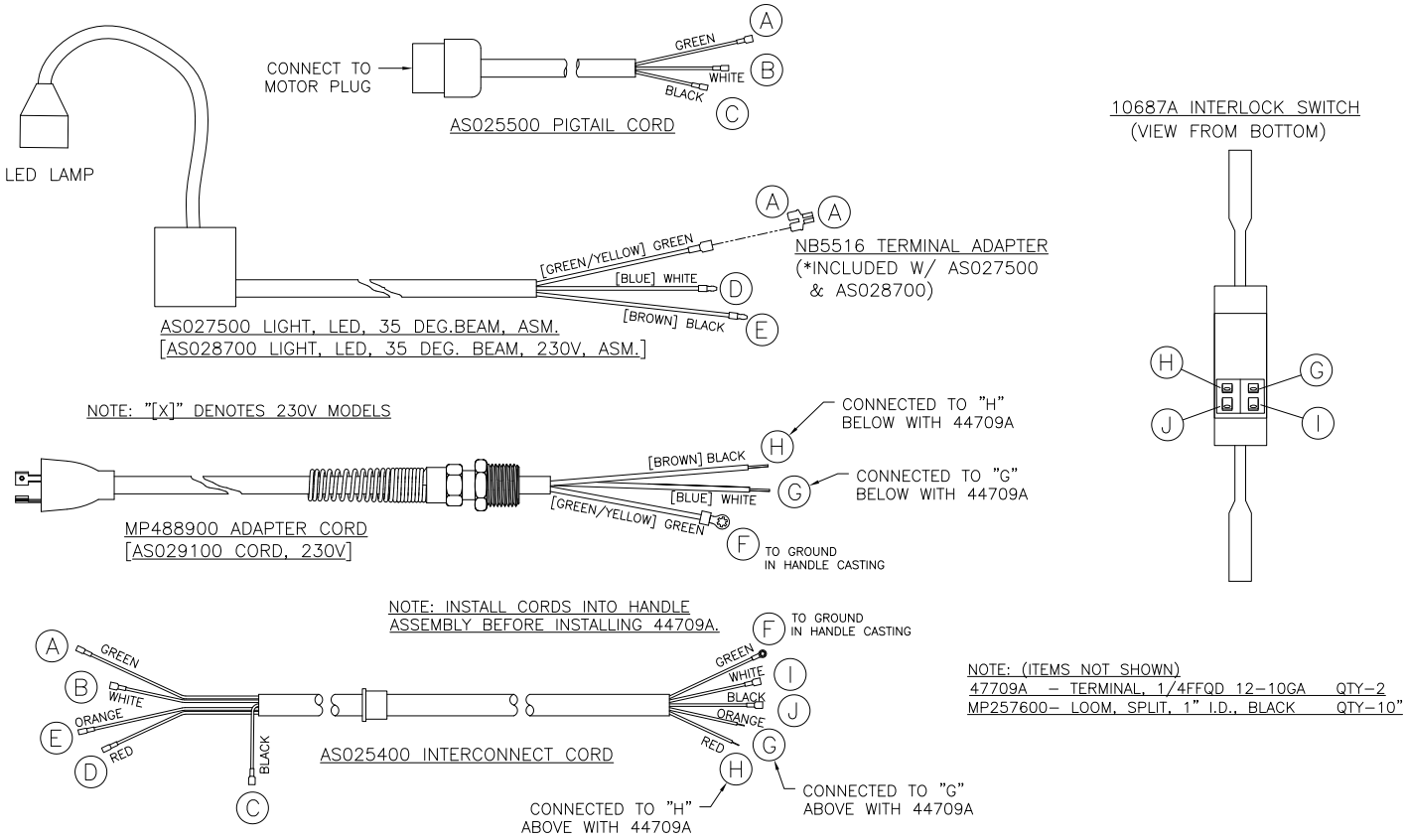

Motor & Gearbox Assembly

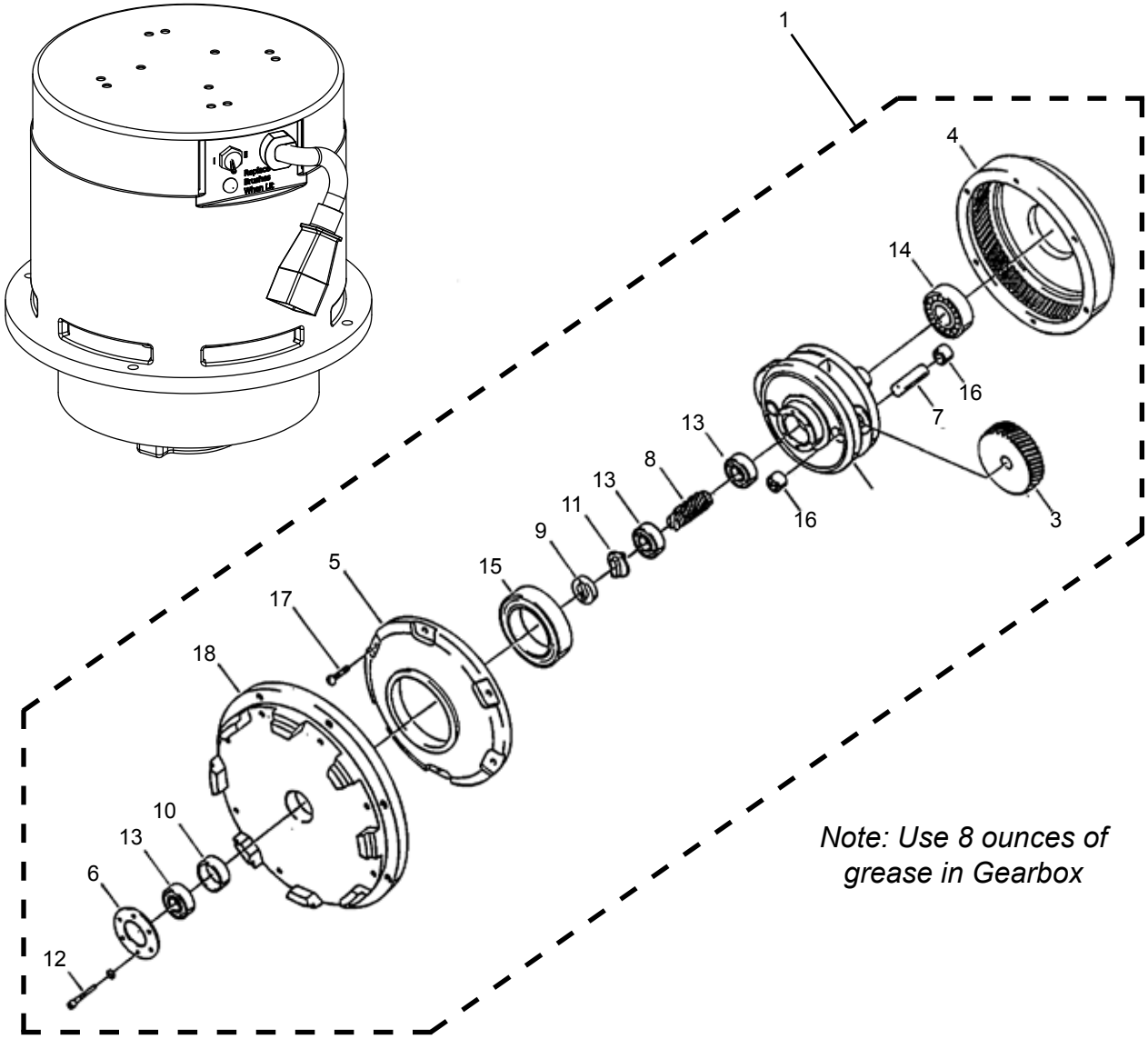

Item	Ref. No.	Description	Qty
1	53646A	GEARBOX	1
2	503802	GREASE, 14oz TUBE *(NOT SHOWN)*	1
3	54408A	GEAR, PLANET	3
4	54856A	GEAR, RING	1
5	54858A	COVER, GEARBOX	1
6	56922A	RETAINER, BEARING	1
7	58312A	SHAFT, PLANET	1
8	58313A	GEAR, PINION	1
9	58314A	RETAINER, SHAFT	1
10	58520A	SPACER, SLEEVE	1
11	69195A	COUPLING, SHAFT	1
12	80141A	SCREW, #10 X 1”	6
13	902606	BEARING, BALL 6002	3
14	902654	BEARING, BALL 6204	1
15	902736	BEARING, BALL 6010	1

Item	Ref. No.	Description	Qty
16	902737	BEARING, NEEDLE	6
17	84808A	SCREW, #10 X 3/4”	6
18	MP487800	FLANGE, MOUNTING, GEARBOX	1
		REPLACEMENT MOTOR PARTS	
19	MP487900	BRUSH, CARBON, ASM. *(NOT SHOWN)*	4
20	AS026200	RECTIFIER, MOTOR *(NOT SHOWN)*	1
	AS028400	RECTIFIER, MOTOR (230V) *(NOT SHOWN)*	1
21	MP488100	CONTROL, SPEED, ASM. *(NOT SHOWN)*	1
22	MP504700	COVER, MOTOR *(NOT SHOWN)*	1
23	41053A	CORDSET, IEC *(NOT SHOWN)*	1
24	MP488400	BEARING, TOP *(NOT SHOWN)*	1
25	MP488500	BEARING, BOTTOM *(NOT SHOWN)*	1
26	MP483600	SWITCH, TOGGLE, SINGLE POLE *(NOT SHOWN)*	1

HydraSand Assembly

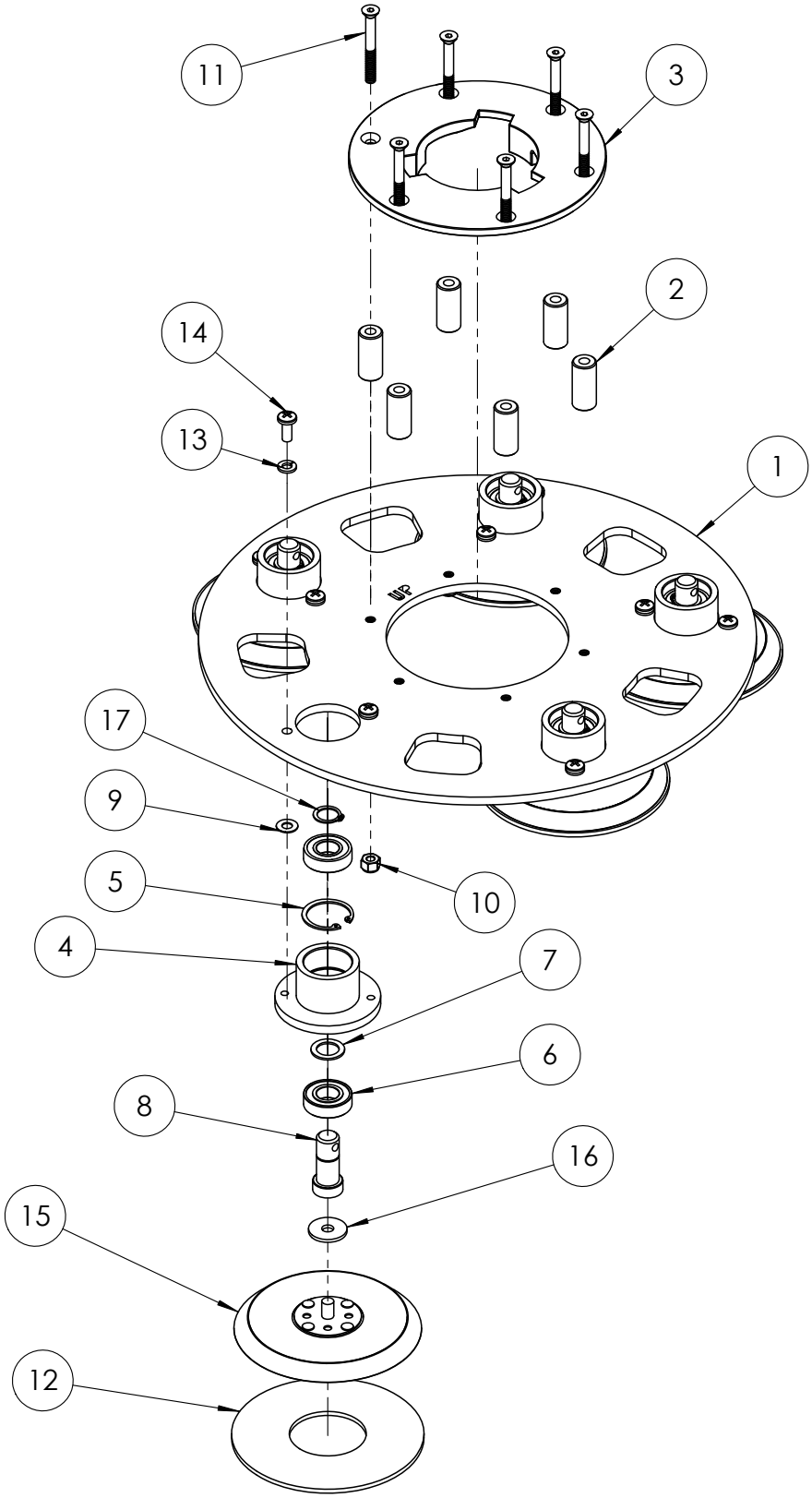

RF096800 12/9/2024

HydraSand Assembly

ITEM NO.	PART NUMBER	DESCRIPTION	QTY.
1	AS132800	PLATE, DRIVER, 1/4"	1
2	NB086000	SPACER, .63 OD X .28 ID X 1.38	6
3	AS004600	PLATE, CLUTCH, DRIVER	1
4	MP497600	HOUSING, BEARING, POLISHING HEAD	5
5	747304	RING RETAIN ARM BRG 37	5
6	56380282	BEARING-BALL 6002 CUSTOM	10
7	61355A	SPACER, CASTER WHEEL	5
8	MP497700	SHAFT, POLISING HEAD	5
9	NB071400	WASHER, GROUND, 1/4 ID X 9/16	5
10	81102A	NUT, NYLOCK, 1/4-20	6
11	NB074900	SCREW, FHSCS, 1/4-20 X 2 1/4	6
12	AS003500	PAD, BACKER, FOAM, 5"	5
13	NB6110	WASHER, LOCK, 1/4"	10
14	962983	SCR 1/4 -20X 5/8 PN ST MACH	10
15	AS005600	PAD, DRIVER, 5", ASM.	5
16	NB080100	WASHER, .312 X 1 X .0840-.0960	5
17	NB070200	RING, RETAINING, EXT	5

RF096800 12/9/2024

Wiring Diagram

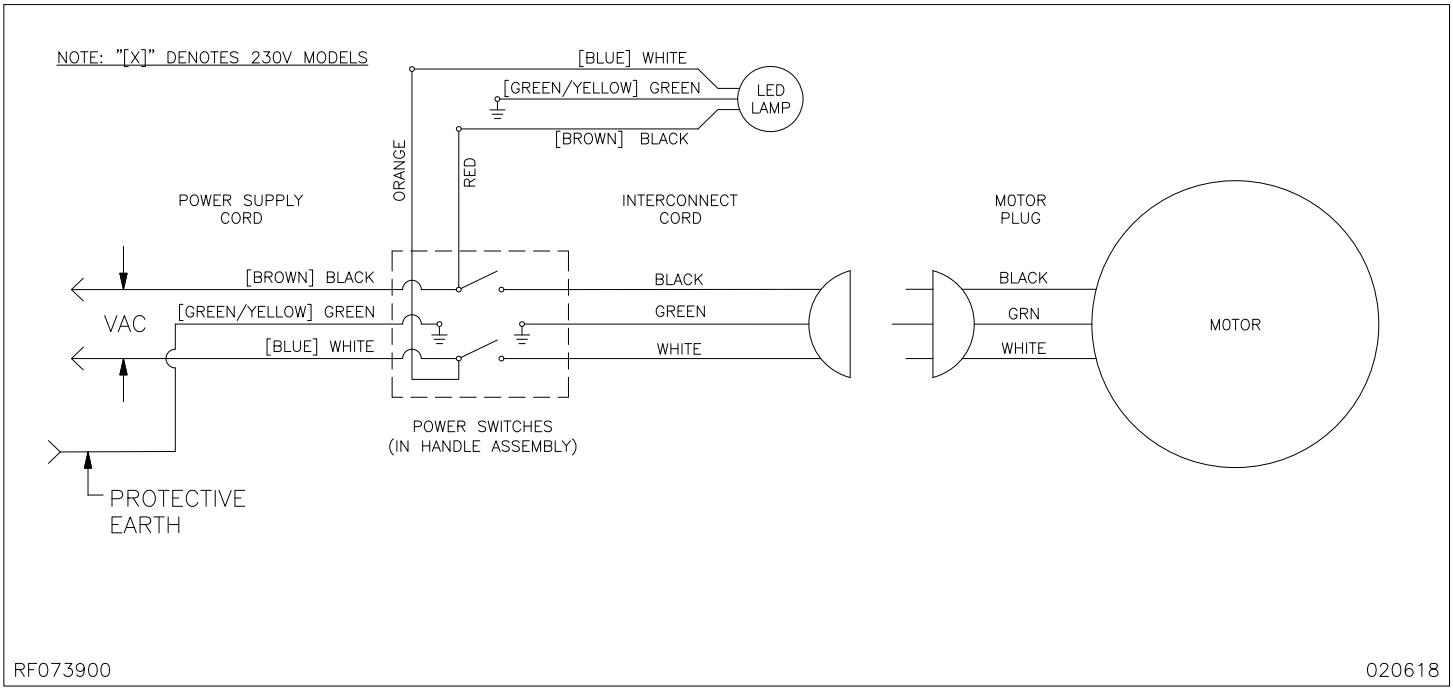

Limited Warranty

Epoch Dual Speed Rotary Sander

TO QUALIFY FOR THIS WARRANTY

(1) Machine must be registered within 30 days from the time of purchase on a form provided by American Sanders. Your American Sanders Distributor is responsible for the registration of your machine. Please cooperate with your Distributor in supplying necessary information on the card.

(2) The machine must have been purchased from American Sanders or an authorized American Sanders Distributor.

(3) This warranty extends to the original purchaser only and is not transferable to subsequent owners.

TIME PERIODS

ONE (1) YEAR WARRANTY - For the Epoch Dual Speed Rotary Sander. Warranted to be free from defects in material and workmanship for a period of one (1) year from the date of purchase by the original owners. (See Exclusions)

EXCLUSIONS (*Not Covered by Warranty*)

(1) Expendable wear items and parts that fail through normal wear by reason of their characteristics (cords, pads, pad holders, belts, wheels, carbon motor brushes, bulbs, filters, bags, or other consumable parts).

(2) This warranty does not extend to parts affected by misuse, neglect, abuse, accidents, damage in transit, overloading the capacity of the machine, failure due to lack of proper maintenance or care as described in the operating and maintenance instructions. All defective parts must be returned to the distributor for credit.

(3) Minor adjustments, such as tightening of screws or bolts not connected with the replacement of parts, are not covered.

(4) Repairs or alterations by an organization other than the factory or an Authorized Service Center are not covered and will void any American Sanders warranty as to the parts or systems repaired or altered by a non-authorized organization.

THE OBLIGATION OF AMERICAN SANDERS

(1) The obligation of American Sanders under this warranty is limited to repairing or replacing, at its option, any part which is proven to be defective in material or workmanship under normal use for the applicable period stated above.

(2) Warranty repairs will be made by your American Sanders Distributor without charge for parts and labor. They will be compensated with a warranty labor rate of $75.00 per hour, for the first year of ownership.

(3) Parts repaired or replaced under this warranty are warranted only during the balance of the original warranty period. All defective parts replaced under these warranties become the property of American Sanders.

WARRANTY SERVICE

To obtain warranty service, take your machine and proof of purchase to any authorized American Sander Distributor. American Sanders will not reimburse expenses for service calls or travel. For the Distributor in your area, call American Sanders Customer Service Department at 800-367-3550 or 336-372-8080. If you are dissatisfied with the service that you receive, call or write American Sanders Customer Service Department for further assistance.

INSTRUCTIONS AND CONDITIONS FOR WARRANTY REIMBURSEMENT

- Order replacement part: Orders will be processed and charged, as normal procedure.
- Call American Sanders for R/A number.
- You will need the Machine Serial Number and the Machine Model Number.
- Parts must be returned, accompanied with the R/A number to be eligible for warranty credit.
- All Warranty Parts will be shipped prepaid UPS Ground, any other method will be at the recipients expense.
- Freight on any Warranty Part after 30 days must be paid for by the Purchaser.
- Warranty labor rate is $75.00 per hour.
- Credit will be issued upon completion of the above steps, at the above rates.

Transportation of hazardous waste or contaminated equipment is subject to various laws and regulations. In returning machines, parts, or accessories under this limited warranty, the end user must certify in writing that the machines, parts, or accessories being returned have not been used for handling, clean up, or disposal of hazardous waste or hazardous materials including but not limited to such things as asbestos, anthrax etc. or if the machines, parts, or accessories being returned have been used for handling, clean up, or disposal of hazardous waste or hazardous materials, then the end user must have the machines, parts or accessories decontaminated by licensed and qualified decontamination professionals and provide written certification of this decontamination signed by the decontamination professionals. These machines, parts or accessories are to be returned only to the local American Sanders Service Center for warranty service along with decontamination certification.

DISCLAIMER OF CONSEQUENTIAL

THERE ARE NO WARRANTIES THAT EXTEND BEYOND THE DESCRIPTION OF THE LIMITED WARRANTIES STATED WITHIN. NO OTHER WARRANTY, EXPRESSED OR IMPLIED, INCLUDING BUT NOT LIMITED TO ANY IMPLIED WARRANTY OF MERCHANTABILITY OR FITNESS FOR A PARTICULAR PURPOSE, IS MADE EXCEPT AS EXPRESSLY STATED HEREIN. ANY STATUTORY IMPLIED WARRANTIES, INCLUDING ANY WARRANTY OF MERCHANTABILITY OR FITNESS FOR A PARTICULAR PURPOSE, THAT ARE IMPOSED BY LAW DESPITE THE EXPRESS LIMITATION OR WARRANTIES ABOVE, ARE EXPRESSLY LIMITED TO THE DURATION OF THE WRITTEN WARRANTY. BUYER UNDERSTANDS, ACKNOWLEDGES AND AGREES THAT THE REMEDIES PROVIDED UNDER THIS LIMITED WARRANTY ARE THE SOLE AND EXCLUSIVE REMEDIES AVAILABLE TO THE BUYER. AMERICAN SANDERS DISCLAIMS ANY RESPONSIBILITY FOR LOSS OF USER TIME OF THE AMERICAN SANDERS MACHINE OR ANY OTHER INCIDENTAL OR CONSEQUENTIAL DAMAGES. THIS INCLUDES, BUT NOT LIMITED TO INDIRECT, SPECIAL OR CONSEQUENTIAL DAMAGES ARISING OUT OF OR IN CONNECTION WITH THE FURNISHING, PERFORMANCE, USE OF OR INABILITY TO USE THE MACHINE. ANY EXTENSIONS OF OR MODIFICATIONS MADE TO THIS WARRANTY BY A DEALER/DISTRIBUTOR OF AMERICAN SANDERS ARE THE SOLE RESPONSIBILITY OF THE DEALER/DISTRIBUTOR.

American Sanders reserves the right to change its warranty policy without notice.

Copyright 2025 American Sanders

Garantía limitada

Epoch Dual Speed Rotary Sander

PARA CALIFICAR PARA ESTA GARANTÍA

(1) El equipo debe registrarse dentro de los 30 días a partir de la fecha de compra en un formulario proporcionado por American Sanders. Su distribuidor American Sanders es responsable del registro de su equipo. Coopere con su distribuidor brindando la información necesaria en la tarjeta.

(2) El equipo debe haberse comprado en American Sanders o con un distribuidor autorizado de American Sanders.

(3) Esta garantía se extiende al comprador original solamente y no se puede transferir a otros propietarios.

PERÍODOS DE TIEMPO

GARANTÍA DE UN (1) AÑO: Para el Epoch Dual Speed Rotary Sander. Garantizado por estar libres de defectos en material y mano de obra por un período de un (1) año a partir de la fecha de compra por parte de los propietarios originales. (Consulte Exclusiones)

EXCLUSIONES (*No cubiertas por la garantía*)

(1) Artículos desgastables y piezas que fallan debido al desgaste normal por sus características (cordones, almohadillas, base de sujeción, bandas, ruedas, cepillos de motor de carbón, bombillas, filtros, bolsas u otras piezas consumibles).

(2) Esta garantía no se extiende a partes afectadas por mal uso, negligencia, abuso, accidentes, daños en tránsito, sobrecarga de la capacidad de la máquina, fallas debido a la falta de mantenimiento o cuidado apropiados como se describe en las instrucciones de operación y mantenimiento. Todas las partes defectuosas se deben devolver al distribuidor para recibir un crédito.

(3) Los ajustes menores, como el ajuste de tornillos o pernos no conectados con el reemplazo de piezas, no están cubiertos.

(4) Las reparaciones o modificaciones realizadas por una organización que no sea la fábrica o un Centro de Servicio Autorizado no están cubiertas y anularán cualquier garantía de American Sanders en cuanto a las piezas o sistemas reparados o modificados por una organización no autorizada.

LA OBLIGACIÓN DE AMERICAN SANDERS

(1) La obligación de American Sanders bajo esta garantía se limita a la reparación o reemplazo, a su elección, de cualquier parte que se compruebe tiene defectos de material o mano de obra durante el uso normal por el período aplicable antes mencionado.

(2) El distribuidor de American Sanders realizará las reparaciones de garantía sin cargo por piezas y mano de obra. Ellos recibirán una compensación con una tarifa de mano de obra de garantía de $75.00 por hora, por el primer año de propiedad.

(3) Las partes reparadas o reemplazadas bajo esta garantía están cubiertas por la garantía solo durante el resto del período de la garantía original. Todas las partes defectuosas reemplazadas bajo estas garantías se convierten en propiedad de American Sanders.

SERVICIOS DE GARANTÍA

Para obtener servicio de garantía, lleve su equipo y prueba de compra a cualquier distribuidor autorizado de American Sanders. American Sanders no reembolsará los gastos por las llamadas o viajes para el servicio. Para el Distribuidor en su área, llame al Departamento de Servicio al Cliente de American Sanders al 800-367-3550 o al 336-372-8080. Si no está satisfecho con el servicio que recibe, llame o escriba al Departamento de Servicio al Cliente de American Sanders para recibir más ayuda.

INSTRUCCIONES Y CONDICIONES PARA EL REEMBOLSO DE GARANTÍA

- Pida la pieza de reemplazo: Los pedidos se procesarán y cobrarán, como un procedimiento normal.
- Llame a American Sanders para obtener el número de R/A.
- Necesitará el número de serie del equipo y el número de modelo del equipo.
- Las piezas se deben devolver, acompañadas con el número de R/A para ser elegible para el crédito por la garantía.
- Todas las piezas de garantía se deberán enviar prepagadas por servicio terrestre de UPS, cualquier otro método será a costa del beneficiario.
- El Comprador debe pagar el flete para cualquier pieza de la garantía después de 30 días.
- La tarifa de mano de obra de la garantía es de $75.00 por hora.
- El crédito se emitirá al completar los pasos anteriores, en las tarifas anteriores.

El transporte de desechos peligrosos o equipos contaminados está sujeto a varias leyes y regulaciones. Al devolver equipo, piezas o accesorios según esta garantía limitada, el usuario final debe certificar por escrito que el equipo, piezas o accesorios que se devuelven no se han utilizado para la manipulación, limpieza o eliminación de residuos peligrosos o materiales peligrosos, incluyendo pero no limitado a cosas tales como asbestos, ántrax, etc. o si el equipo, piezas o accesorios que se devuelven han sido utilizados para la manipulación, limpieza o eliminación de residuos peligrosos o materiales peligrosos, entonces el usuario final debe tener el equipo, piezas o accesorios descontaminados por profesionales de la descontaminación autorizados y calificados y que proporcionen una certificación por escrito de esta descontaminación firmada por los profesionales de la descontaminación. Estos equipos, piezas o accesorios deben devolverse solo al Centro de Servicio American Sanders de la localidad para obtener el servicio de garantía junto con la certificación de descontaminación.

DESCARGO DE RESPONSABILIDAD DE DAÑOS Y PERJUICIOS

NO HAY GARANTÍAS QUE SE EXTIENDAN MÁS ALLÁ DE LA DESCRIPCIÓN DE LAS GARANTÍAS LIMITADAS INDICADAS. NINGUNA OTRA GARANTÍA, EXPRESA O IMPLÍCITA, INCLUYENDO PERO NO LIMITADO A CUALQUIER GARANTÍA IMPLÍCITA DE COMERCIALIZACIÓN O IDONEIDAD PARA UN PROPÓSITO EN PARTICULAR, SE HACE EXCEPTO COMO SE INDICA EXPRESAMENTE AQUÍ. CUALQUIER GARANTÍA LEGAL IMPLÍCITA, INCLUIDA CUALQUIER GARANTÍA DE COMERCIABILIDAD O IDONEIDAD PARA UN PROPÓSITO EN PARTICULAR, QUE SEA IMPUESTA POR LA LEY A PESAR DE LA LIMITACIÓN EXPRESA O LAS GARANTÍAS ANTERIORES, ESTÁ EXPRESAMENTE LIMITADA A LA DURACIÓN DE LA GARANTÍA ESCRITA. EL COMPRADOR ENTIENDE, RECONOCE Y ACEPTA QUE LOS RECURSOS PROVISTOS BAJO ESTA GARANTÍA LIMITADA SON LOS ÚNICOS Y EXCLUSIVOS RECURSOS DISPONIBLES PARA EL COMPRADOR. AMERICAN SANDERS SE LIBERA DE TODA RESPONSABILIDAD POR LA PÉRDIDA DE TIEMPO DEL USUARIO DEL EQUIPO AMERICAN SANDERS O CUALQUIER OTRO DAÑO INCIDENTAL O CONSECUENCIAL. ESTO INCLUYE, PERO NO ESTÁ LIMITADO A DAÑOS INDIRECTOS, ESPECIALES O CONSECUENCIALES DERIVADOS DE O RELACIONADOS CON EL SUMINISTRO, EL FUNCIONAMIENTO, EL USO O LA INCAPACIDAD DE USAR EL EQUIPO. CUALQUIER EXTENSIÓN O MODIFICACIÓN HECHA A ESTA GARANTÍA POR UN CONCESIONARIO/DISTRIBUIDOR DE AMERICAN SANDERS SON RESPONSABILIDAD EXCLUSIVA DEL CONCESIONARIO/DISTRIBUIDOR.

American Sanders se reserva el derecho de cambiar su política de garantía sin previo aviso.

Copyright 2025 American Sanders

Garantie limitée

Ponceuse rotative à deux vitesses Epoch

POUR ÊTRE ADMISSIBLE À LA PRÉSENTE GARANTIE

(1) L'appareil doit être inscrit dans les 30 jours suivant la date d'achat à l'aide de la fiche fournie par American Sanders. L'enregistrement de votre appareil s'effectue auprès de votre distributeur American Sanders. Veuillez lui fournir tous les renseignements exigés sur la fiche.

(2) L'appareil doit avoir été acheté auprès d'American Sanders ou d'un distributeur American Sanders autorisé.

(3) La présente garantie n'est offerte qu'à l'acheteur initial et n'est pas transférable aux propriétaires subséquents.

PÉRIODES

GARANTIE D'UN (1) AN — Pour le modèle de ponceuse rotative à deux vitesses Epoch. Garanti contre tout défaut de matériaux et de main-d'œuvre pour une période d'un (1) an à compter de la date d'achat par le propriétaire initial. (Se reporter aux exclusions.)

EXCLUSIONS (*Non couvert par la garantie*)

(1) Les produits et pièces consomptibles qui font défaut par suite d'une usure normale en raison de leurs caractéristiques (cordons, patins, supports à patin, courroies, roulettes, balais de moteur en carbone, ampoules, filtres, sacs ou autres pièces consomptibles).

(2) Cette garantie ne couvre pas les pièces brisées par suite d'abus, de mésusage, de négligence, d'accidents, de bris lors du transport, d'une surcharge de la capacité de l'appareil, d'une défaillance due au manque d'entretien ou de soins adéquats tels qu'ils sont décrits dans les instructions d'utilisation et d'entretien. Vous devez retourner les pièces défectueuses au distributeur pour vous les faire créditer.

(3) Les ajustements mineurs, tels que le serrage de vis ou de boulons sans lien avec le remplacement de pièces, ne sont pas couverts.

(4) Les réparations ou modifications réalisées par toute organisation autre que l'usine ou un centre de service autorisé ne sont pas couvertes et annuleront la garantie American Sanders en ce qui concerne les pièces ou systèmes réparés ou modifiés par une organisation non autorisée.

LES OBLIGATIONS D'AMERICAN SANDERS

(1) Les obligations d'American Sanders en vertu de cette garantie se limitent à la réparation ou au remplacement, à sa discrétion, de toute pièce présentant un défaut avéré de matériaux ou de main-d'œuvre dans le cadre d'une utilisation normale pour la période applicable énoncée plus haut.

(2) Les réparations sous garantie seront effectuées par votre distributeur American Sanders sans frais pour les pièces et la main-d'œuvre. Ce dernier sera rémunéré au taux de main-d'œuvre de 75,00 $/h pour la première année de possession.

(3) Les pièces réparées ou remplacées en vertu de cette garantie ne sont garanties que pendant le restant de la période originale de garantie. Toutes les pièces défectueuses remplacées en vertu de ces garanties deviennent la propriété d'American Sanders.

SERVICE SOUS GARANTIE

Pour obtenir du service sous garantie, apportez votre appareil et une preuve d'achat chez un distributeur American Sanders autorisé. American Sanders ne remboursera pas de frais engagés en lien avec des appels de service ou des déplacements. Pour connaître le distributeur de votre région, communiquez avec le service à la clientèle d'American Sanders au 800 367-3550 ou au 336 372-8080. Si vous n'êtes pas satisfait du service reçu, communiquez avec le service à la clientèle d'American Sanders pour obtenir de l'aide.

INSTRUCTIONS ET CONDITIONS POUR L'OBTENTION D'UN REMBOURSEMENT SOUS GARANTIE

- Commande de pièce de rechange : Les commandes sont traitées et facturées comme toute procédure normale.
- Communiquez avec American Sanders pour obtenir un numéro d'autorisation de renvoi.
- Il vous faudra le numéro de série et le numéro de modèle de l'appareil.
- Vous devez joindre le numéro d'autorisation de renvoi aux pièces renvoyées pour être admissible au crédit en vertu de la garantie.
- Toutes les pièces sous garantie sont expédiées UPS Ground prépayé; tout autre moyen d'expédition est au frais du destinataire.
- Le transport de toute pièce sous garantie après 30 jours doit être payé par l'acheteur.
- Le taux de main-d'œuvre sous garantie est de 75,00 $/h.
- Le crédit est émis une fois toutes les étapes précédentes terminées, aux tarifs précités.

Le transport de déchets dangereux ou d'équipements contaminés est assujetti à différentes lois et réglementations. Au moment de retourner des appareils, des pièces ou des accessoires en vertu de cette garantie limitée, l'utilisateur final doit attester par écrit que les appareils, pièces ou accessoires retournés n'ont pas été utilisés pour la manipulation, le nettoyage ou l'élimination de déchets dangereux ou de matières dangereuses, y compris, mais sans s'y limiter, amiante, anthrax, etc. ou, si les appareils, pièces ou accessoires retournés ont été utilisés pour la manipulation, le nettoyage ou l'élimination de déchets dangereux ou de matières dangereuses, alors l'utilisateur final doit faire décontaminer les appareils, pièces ou accessoires par un professionnel de la décontamination qualifié et agréé et fournir une attestation écrite de cette décontamination signée par le professionnel de la décontamination. Ces appareils, pièces ou accessoires ne doivent être retournés qu'au centre de service American Sanders local pour un service sous garantie et être accompagnés de l'attestation de décontamination.

CLAUSE DE NON-RESPONSABILITÉ

AUCUNE GARANTIE N'EST CONSENTIE AU-DELÀ DE LA DESCRIPTION DES PRÉSENTES GARANTIES LIMITÉES. AUCUNE AUTRE GARANTIE, EXPRESSE OU IMPLICITE, Y COMPRIS, MAIS SANS S'Y LIMITER, TOUTE GARANTIE IMPLICITE DE QUALITÉ MARCHANDE OU D'ADAPTATION À UN EMPLOI PARTICULIER, N'EST FAITE HORMIS CELLES INDIQUÉES AUX PRÉSENTES. TOUTE GARANTIE LÉGALE IMPLICITE, Y COMPRIS TOUTE GARANTIE DE QUALITÉ MARCHANDE OU D'ADAPTATION À UN EMPLOI PARTICULIER, QUI EST IMPOSÉE PAR LA LOI MALGRÉ LES LIMITES OU GARANTIES EXPRESSES PRÉCÉDENTES, EST EXPRESSÉMENT LIMITÉE À LA DURÉE DE LA GARANTIE ÉCRITE. L'ACHETEUR COMPREND, RECONNAÎT ET CONVIENT QUE LE RECOURS PRÉVU EN VERTU DE CETTE GARANTIE LIMITÉE CONSTITUE LE SEUL ET UNIQUE RECOURS À SA DISPOSITION. AMERICAN SANDERS SE DÉGAGE DE TOUTE RESPONSABILITÉ À L'ÉGARD DU TEMPS D'UTILISATION DE L'APPAREIL AMERICAN SANDERS PERDU ET DE TOUT AUTRE DOMMAGE ACCESSOIRE OU CONSÉCUTIF. CELA COMPREND, MAIS SANS S'Y LIMITER, LES DOMMAGES INDIRECTS, PARTICULIERS OU CONSÉCUTIFS DÉCOULANT DIRECTEMENT OU INDIRECTEMENT DE LA PRESTATION, DE LA PERFORMANCE, DE L'UTILISATION DE L'APPAREIL OU DE L'IMPOSSIBILITÉ DE L'UTILISER. TOUTE PROLONGATION OU MODIFICATION DE CETTE GARANTIE EFFECTUÉE PAR UN CONCESSIONNAIRE OU UN DISTRIBUTEUR D'AMERICAN SANDERS RELÈVE ENTIÈREMENT DU CONCESSIONNAIRE OU DU DISTRIBUTEUR.

American Sanders se réserve le droit de changer sa politique de garantie sans préavis.

Copyright 2025 American Sanders

American Sanders

an AMANO Company

1 Eclipse Rd ● PO Box 909
Sparta, North Carolina 28675 ● USA
www.pioneereclipse.com
www.americansanders.com

+1-336-372-8080
1-800-367-3550
Fax 1-336-372-2913

© 2025 American Sanders

LT077200
Epoch_L
051425